Lifting station *Aqualift F XL,* fittings made of plastic (up to SPF 3000)

Above-ground installation, from model year 04/2013

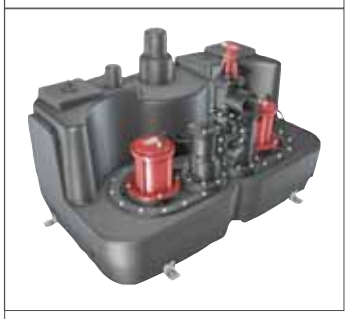

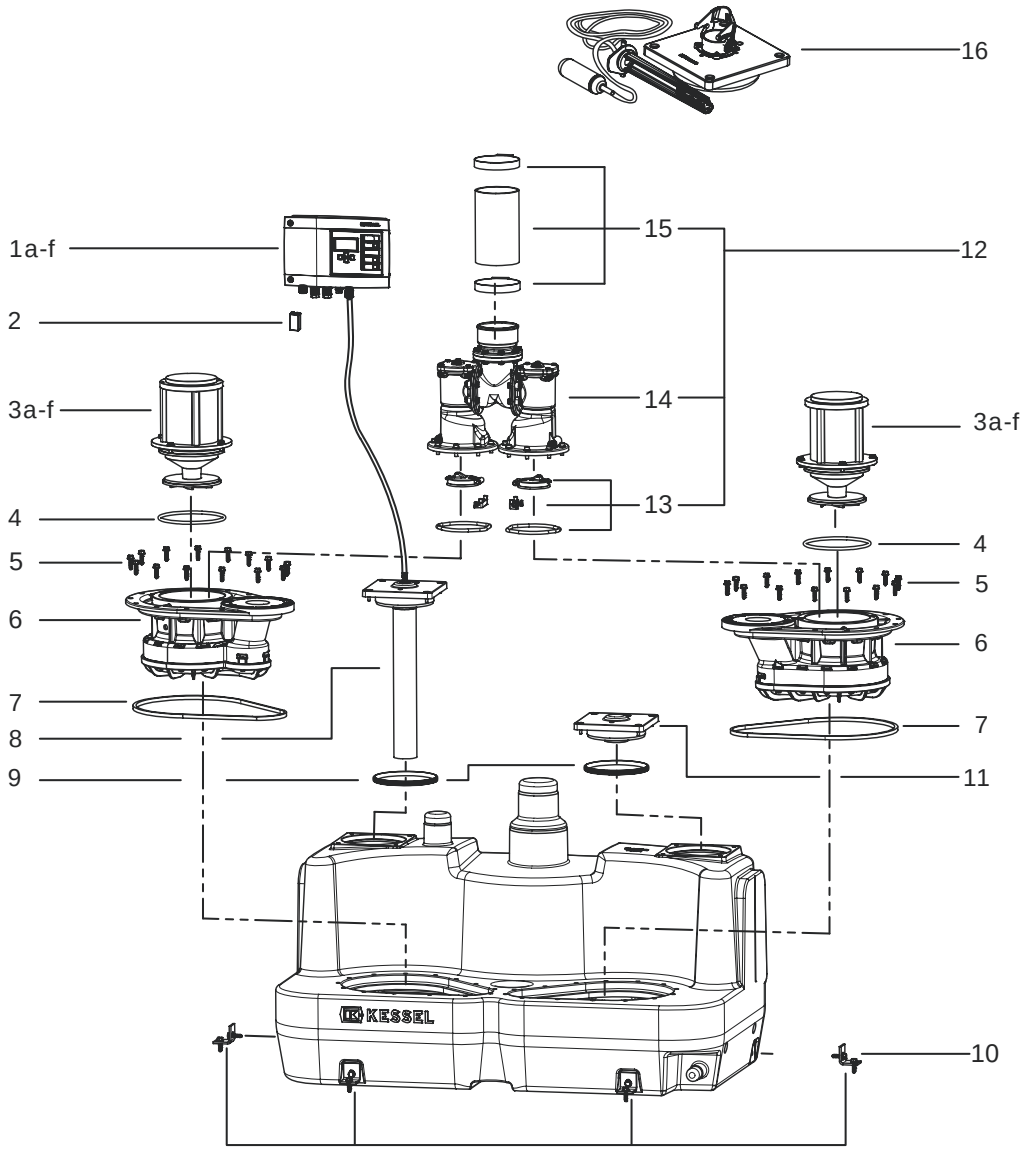

Pos.	Description	Article #
1	Control unit	
1a	230 V Mono Comfort	28731
1b	230 V Duo Comfort	28746
1c	400 V Mono for SPF 1500	28755
1d	400 V Mono for SPF 3000	28756
1e	400 V Duo for SPF 1500	28757
1f	400 V Duo for SPF 3000	28758
2	Battery	680034
3	Motor	
3a	230 V for SPF 1400 S3	28029
3b	230 V for SPF 1400 S1	28066
3c	400 V for SPF 1500 S3	28028
3d	400 V for SPF 1500 S1	28065
3e	400 V for SPF 3000 S3	28027

Pos.	Description	Article #
3f	400 V for SPF 3000 S1	28064
4	Flange seal for SPF 1400-4500	680052
5	Screws (14 x)	680047
6	Pump flange for SPF 1400-3000	680050
7	Pump flange seal	680045
8	Submersible pipe with 5 m hose	28050
9	Seal for cleaning opening	680003
10	Attachment bracket with screws (2 x)	680046
11	Access cover	680044
12	Replacement set flap housing Ø 110	28677
13	Backwater valve, rolling ring and flap stay	680054
14	Flap housing, double system	680061
15	Pressure hose with 2 hose clamps, Ø 110	28663
16	Optional alarm float switch	28014